2930 SERIES WITH STRAIGHT SHANK
DISC-CHISEL COULTER BRACKET KIT W/STRAIGHT SHANK
WITH 2910 SERIES AND 2950 SERIES

2565-185_REV_D 03/2025

INSTALLATION AND OPERATING INSTRUCTIONS

Before assembling the brackets, mark your bar for the spacing of the coulters. Select part numbers 3010-301, 2525-451, 2520-452, 2520-394 and mount them loose on the bar as shown in the figure above. If installing a chisel or coil shank, slide it under the tool bar and bolt to bottom shank bracket with 5/8”-11 x 3-1/4” bolt (2502-385) and 5/8” nuts and washers as shown. Align the brackets on the marks on the tool bar and tighten. (Be sure brackets remain square with the bar to assure shank will be straight when installing.)

Install u-bolts (3010-304) into shank brackets using the ½” flat washer, lock washers, and nuts. (Leave the u-bolts loose to allow straight shank to go through the u-bolts.) Drive roll pin (2530-208) into one end of the straight shank (3010-303) until it is centered in the shank. Drop the shank down through the top of the u-bolts until the roll pin is resting on the top u-bolt. Set the shank at the proper depth and tighten the ½” nuts on the u-bolts. An additional roll pin is supplied for the bottom hole in the shank AFTER the coulter is installed.

PERIODICALLY CHECK ALL NUTS TO BE SURE THEY ARE TIGHT.

YETTER MANUFACTURING CO.
FOUNDED 1930
Colchester, IL 62326-0358
Toll free: 800/447-5777
309/776-3222 (Fax)
Website: www.yetterco.com
E-mail: info@yetterco.com

YETTER

FOREWORD

You've just joined an exclusive but rapidly growing club.
For our part, we want to welcome you to the group and thank you for buying a Yetter product.

We hope your new Yetter products will help you achieve both goals-increase your productivity and increase your efficiency so that you may generate more profit.

This operator's manual has been designed into four major sections: Foreword, Safety Precautions, Installation Instructions and Parts Breakdown.

This **SAFETY ALERT SYMBOL** indicates important safety messages in the manual...When you see this symbol, be alert to the possibility of **PERSONAL INJURY** and carefully read the message that follows.

DANGER: Indicates an imminently hazardous situation which, if not avoided "will" result in death or serious injury. This signal word is to be limited to the most extreme situations

WARNING: Indicates a potentially hazardous situation which, if not avoided, "could" result in death or serious injury.

CAUTION: Indicates a potentially hazardous situation, which if not avoided, "may" result in minor or moderate injury. It may also be used to alert against unsafe practices.

NOTICE: Indicates information considered important, but not hazard related (e.g., messages relating to property damage).

It is the responsibility of the user to read the operator's manual and comply with the safe and correct operating procedure and to lubricate and maintain the product according to the maintenance schedule in the operator's manual.

The user is responsible for inspecting his machine and for having parts repaired or replaced when continued use of the product would cause damage or excessive wear to the other parts.

It is the user's responsibility to deliver his machine to the Yetter dealer who sold him the product for service or replacement of defective parts, which are covered by the warranty policy.

If you are unable to understand or follow the instructions provided in this publication, consult your local Yetter dealer or contact:

YETTER MANUFACTURING CO.
309/776-4111
800/447-5777
309/776-3222 (FAX)
Website: www.yetterco.com
E-mail: info@yetterco.com

WARRANTY POLICY

Yetter Manufacturing warrants all products manufactured and sold by it against defects in material. This warranty being expressly limited to replacement at the factory of such parts or products as will appear to be defective after inspection. This warranty does not obligate the Company to bear cost of labor in replacement of parts. It is the policy of the company to make improvements without incurring obligations to add them to any unit already sold. No warranty is made or authorized to be made, other than herein set forth. This warranty is in effect for one year after purchase.

Dealer :_____

Yetter Manufacturing warrants its own products only and cannot be responsible for damage to equipment on which mounted.

SAFETY PRECAUTIONS

A brief description of signal words that may be used in this manual:
DANGER: Indicates an imminently hazardous situation which, if not avoided "will" result in death or serious injury. This signal word is to be limited to the most extreme situations.

WARNING: Indicates a potentially hazardous situation which, if not avoided, "could" result in death or serious injury.

CAUTION: Indicates a potentially hazardous situation, which if not avoided, "may" result in minor or moderate injury. It may also be used to alert against unsafe practices.

NOTICE: Indicates information considered important, but not hazard related (e.g., messages relating to property damage).

Consult your implement and tractor operator's manual for correct and safe operating practices. Be aware of towed implement width and allow safe clearance.

Safety decals are placed on the implement to alert the operator and others to the risk of personal injury or unsafe operation during normal operations and servicing.

1. The safety decals must be kept clean and in good condition to ensure that they are legible.
2. Safety decals must be replaced if they are missing or illegible.
3. When components are replaced during repair or servicing, check that the new components include the necessary safety signs.
4. Replacement safety decals may be obtained from your local dealer.

WARNING

Read these instructions carefully to acquaint yourself with the Equipment. Working with unfamiliar equipment can lead to accidents.

Never park the equipment on a steep incline or leave the equipment running unattended.

Never clean, lubricate or adjust a machine that is in motion.

Always check that straps are secure.

Make sure latches are in pinned position when moving equipment.

Do not allow children to operate this equipment.

Do not allow riders on the equipment, trailer and/or pick-up.

Use speed and caution dictated by the terrain being traversed. Do not operate on any slope steep enough to cause tipping or loss of control.

Read and understand the operator's manual and require all other persons who will operate the equipment to do the same.

If operating on public roadways, where legal, be certain all lighting is operating properly and observe all traffic laws.

Beware of increased stopping distances and control effort when operating with implements attached.

Be familiar with all controls and be prepared to stop equipment quickly in an emergency.

FAILURE TO HEED MAY RESULT IN PERSONAL INJURY OR DEATH.

2930 SERIES WITH STRAIGHT SHANK

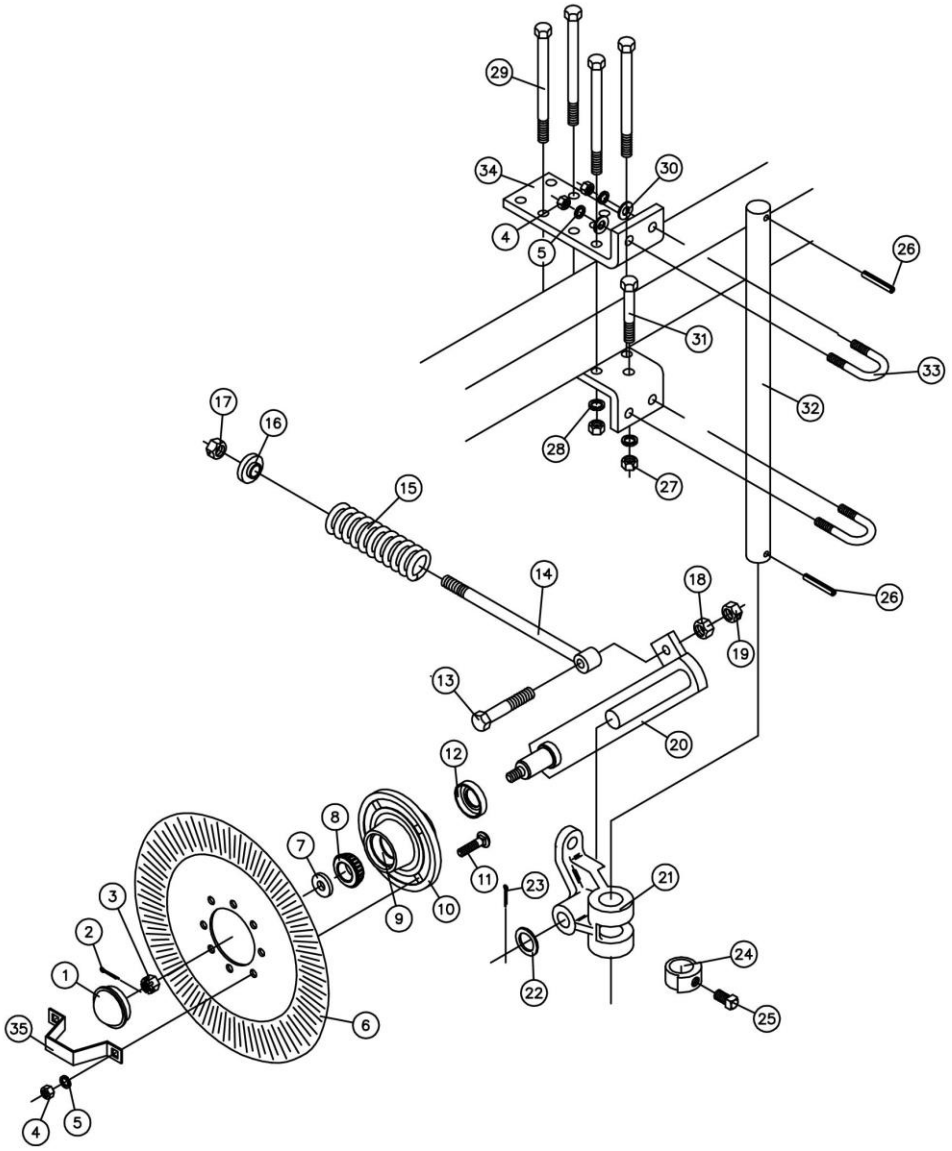

2930–020/2931–020
20" SPRING CUSHION DISC CHISEL COULTER

Key	Qty	Part No.	Description
1	1	2570–375	HUB CAP
2	1	2531–102	1/8 X 1 1/4 COTTER PIN BLACK
3	1	2520–469	5/8–1/ SLOTTED HEX NUT, BLACK
4	8	2520–352	1/2–13 HEX NUT ZP
5	8	2525–352	1/2 MED LOCKWASHER ZP
6	1	2571–168	.157 X 20" MULTI HOLE FLUTED
7	1	2526–449	5/8 FLATWASHER, 1/4 ±.010 THK
8	2	2550–027	CONE, LM67048
9	2	2550–029	CUP (PRE–ASSEM. W/ NO. 10)
10	1	2900–102	HUB SUB–ASSEMBLY
11	4	2505–339	1/2–13 X 1 1/2 CAR BLT GR 5 ZP
12	1	2550–066	TRIPLE LIP SEAL, NTI #1812–4
13	1	2502–410	3/4–16 X 3" HHCS GR 5 ZP
14	1	2570–125	PRESSURE ROD, 9 3/8" EYEBOLT
15	1	2910–311	7/16 WIRE 2 1/8 OD X 1 1/4 ID X 7 1/4 C SPRING
16	1	2910–302	2910 SPRING BUSHING
17	1	2520–516	3/4–10NYLON INSERT LCKNT, GR 2, ZP
18	1	2520–508	3/4–16 HEX NUT ZP
19	1	2520–511	3/4–16 LOCK HEX NUT ZP
20	1	2910–201	COULTER ARM W.A.
21	1	2910–320	PIVOT CASTING ASS'Y
22	1	2526–561	1 17/64ID X 1 7/8OD X 14GA MB BL
23	1	2531–125	1/4 X 1 3/4 COTTER PIN ZP
24	1	2910–301	LOCKING COLLAR PLOW COULTER
25	1	2503–379	5/8–11 X 1 SQ HCPSS GR 5 ZP
26	2	2530–208	3/8 X 2 1/2 ROLL PIN ZP
27	5	2520–452	5/8–11 HEX NUT ZP
28	5	2525–451	5/8" MED. LOCKWASHER ZP
29	4	2502–394	5/8–11 X 8" HHCS GR. 5 ZP
	4	2502–348	5/8–11 X 11" HHCS GR. 5 ZP
30	4	2526–351	1/2" STD. FLATWASHER ZP
31	1	2502–385	5/8–11 X 3–1/4" HHCS GR. 5 ZP
32	1	3010–303	STRAIGHT COULTER SHANK
33	2	3010–304	SHANK U–BOLT ZP
34	2	3010–301	SHANK BRACKET
	2	3010–306	SHANK BRACKET, 5X7 OR 7X7 BAR
35	1	2987–301	HUB CAP RETAINER

REVISED 04/29/15

I223C

2950 SERIES WITH OFFSET SHANK

DISC-CHISEL COULTER BRACKET KIT W/OFFSET SHANK

INSTALLATION AND OPERATING INSTRUCTIONS

The 2950 Offset Disc Chisel coulter is designed with two mounting arrangements in mind. The bracket assembly can be attached to the frame beside the existing shank brackets or can replace the existing shank brackets. Before beginning to assemble, choose the method needed and follow the instructions for that method.

Installing New Brackets

Before assembling the brackets, mark your bar for the spacing of the coulters. Select parts numbered 3010-301, 2525-451, 2520-452, and 2502-294 and mount them loose on the bar as shown. If installing a chisel or coil shank, slide it under the tool bar and bolt to bottom shank bracket with 5/8-11 x 3-1/4" bolt (2505-385) and 5/8" nuts and washers. Align the brackets on the marks on the toolbar and tighten. (Be sure brackets remain square with the bar to assure shank will be straight when installed.) Offset shank can now be installed. (See below)

Installing Beside Existing Brackets

If mounting brackets next to existing brackets select part numbers 3010-301, 2525-451, 2520-452, and 2502-395 and mount as shown. Slide the assembly as close as possible to the existing brackets and tighten 5/8" bolts and nuts. Offset shank can now be installed.

Installing Offset Shank

Install clamp weld assemblies (3011-201) into shank brackets using the ½" flat washers, lock washers, nuts, and 4" bolts. (Leave the clamp weld assemblies loose to allow shank to go through the assembly.) Raise the shank up through the bottom until shank is through both clamp weld assemblies. Set the shank at the proper depth and tighten the ½" nuts and bolts.

Before going to the field, all coulters should first be set to operate at the same depth. To adjust the depth of each coulter, the clamp w.a. holding the 1-1/2" shank must be loosened. The 1-1/2" shank can then be slipped up or down to give the desired depth and/or clearance. At this time turn the offset shank to position the coulter in front of the chisel or coil shank. (NOTE: The depth of the coulters should be set so the hub of each coulter is always above ground level when in use.)

PERIODICALLY CHECK NUTS TO BE SURE THEY ARE TIGHT.

YETTER MANUFACTURING CO.
FOUNDED 1930
Colchester, IL 62326-0358
Toll free: 800/447-5777
309/776-3222 (Fax)
Website: www.yetterco.com
E-mail: info@yetterco.com

YETTER

2950 SERIES WITH OFFSET SHANK

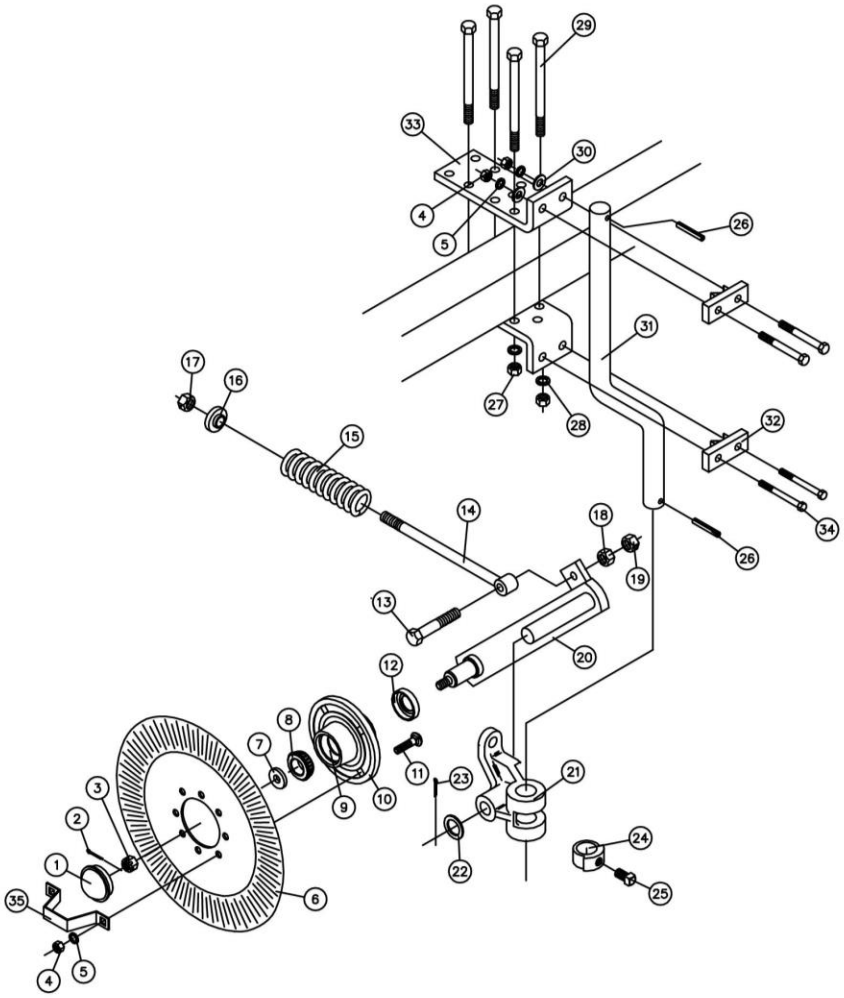

2950–020/2951–020
20" DISC CHISEL COULTER W/OFFSET SHANK

Key	Qty	Part No.	Description
1	1	2570–375	HUB CAP
2	1	2531–102	1/8 X 1 1/4 COTTER PIN BLACK
3	1	2520–469	5/8–1/ SLOTTED HEX NUT, BLACK
4	8	2520–352	1/2–13 HEX NUT ZP
5	8	2525–352	1/2 MED LOCKWASHER ZP
6	1	2571–168	.157 X 20" MULTI HOLE FLUTED
7	1	2526–449	5/8 FLATWASHER, 1/4 ±.010 THK
8	2	2550–027	CONE, LM67048
9	2	2550–029	CUP (PRE–ASSEM. W/ NO. 10)
10	1	2900–102	HUB SUB–ASSEMBLY
11	4	2505–339	1/2–13 X 1 1/2 CAR BLT GR 5 ZP
12	1	2550–066	TRIPLE LIP SEAL, NTI #1812–4
13	1	2502–410	3/4–16 X 3" HHCS GR 5 ZP
14	1	2570–125	PRESSURE ROD, 9 3/8" EYEBOLT
15	1	2910–311	7/16 WIRE 2 1/8 OD X 1 1/4 ID X 7 1/4 C SPRING
16	1	2910–302	2910 SPRING BUSHING
17	1	2520–516	3/4–10NYLON INSERT LCKNT, GR 2, ZP
18	1	2520–508	3/4–16 HEX NUT ZP
19	1	2520–511	3/4–16 LOCK HEX NUT ZP
20	1	2910–201	COULTER ARM W.A.
21	1	2910–320	PIVOT CASTING ASS'Y
22	1	2526–561	1 17/64ID X 1 7/8OD X 14GA MB BL
23	1	2531–125	1/4 X 1 3/4 COTTER PIN ZP
24	1	2910–301	LOCKING COLLAR PLOW COULTER
25	1	2503–379	5/8–11 X 1 SQ HCPSS GR 5 ZP
26	2	2530–208	3/8 X 2 1/2 ROLL PIN ZP
27	4	2520–452	5/8–11 HEX NUT ZP
28	4	2525–451	5/8" MED. LOCKWASHER ZP
29	4	2502–395	5/8–11 X 6–1/2" HHCS GR. 5 ZP
	4	2502–348	5/8–11 X 11" HHCS GR. 5 ZP
30	4	2526–351	1/2" STD. FLATWASHER ZP
31	1	3011–302	OFFSET COULTER SHANK, 5–1/2"
32	2	3011–201	CLAMP W.A.
33	2	3010–301	SHANK BRACKET
	2	3010–306	SHANK BRACKET, 5X7 OR 7X7 BAR
34	4	2502–364	1/2–13 X 4" HHCS GR. 5 ZP
35	1	2987–301	HUB CAP RETAINER

REVISED 04/29/15

2910 SERIES SPRING CUSHIONED PLOW COULTER PARTS & INSTALLATION

KEY.	QTY.	PART NO.	DESCRIPTION
1	1	2502-410	3/4-16 X 3" HHCS GR5 ZP
2	1	2531-125	1/4 X 1 3/4" COTTER KEY
3	1	2526-561	1-17/64"ID X 7/8" X 14GA MACHINERY BUSHING
4	1	2910-320	PIVOT CASTING
5	1	2910-311	SPRING
6	1	2910-302	SPRING BUSHING
7	1	2520-516	3/4-10 LOCK HEX NUT ZP
8	1	2520-508	3/4-16 HEX NUT ZP
9	1	2570-125	EYEBOLT, 3/4" EYE
10	1	2520-511	3/4-16 LOCK HEX NUT ZP
11	1	2910-201	COULTER ARM W.A.
12	1	2910-127	SPRING CUSHIONED BRKT. AND HUB ASSEMBLY (INCLUDES 1-11)
13	1	2910-301	LOCKING COLLAR
14	1	2503-379	5/8"-11 X 1 SQ. HCPSS GR. 2
15	OPT.	2571-168	20" RIPPLE BLADE
	OPT.	2571-158	17" RIPPLE BLADE

UPDATED 04/16/19

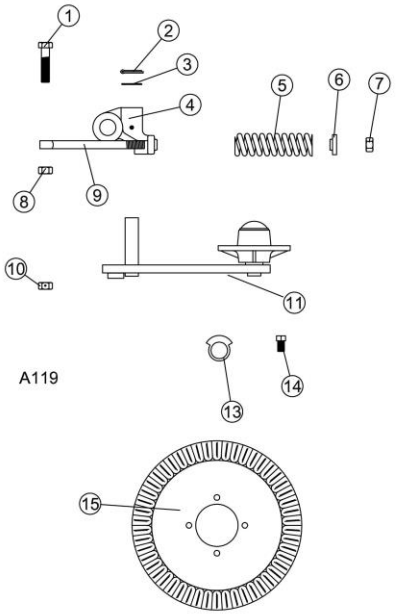

INSTALLATION AND OPERATING INSTRUCTIONS

CAUTION: COULTER BLADE HAS SHARP EDGE. USE CARE WHEN WORKING WITH OR CLOSE TO BLADES

Place the coulter and locking collar (2910-301) over the shank then insert pin through the retainer hole. After aligning coulter for proper position, tighten setscrew in locking collar. When tightening setscrew, align locking collar in center of slot in hinge casting for maximum swivel.

The coulter is equipped with tapered bearings; and are pre-lubricated during assembly. Grease the zerk on the hinge casting (2910-320) prior to using the coulters then grease the hinge casting and hub assembly every 50 hours. Before going to the field, check the springs to be sure they have been given a preload tension. If the spring can be rotated on the push rod by hand, it is too loose and must be tightened. Failure to do so may result in lost parts or excessive wear. Approximately one inch of threads on the end of the push rod should be exposed when the spring is properly preloaded.

PERIODICALLY CHECK ALL NUTS TO BE SURE THEY ARE TIGHT.

YETTER MANUFACTURING CO.
FOUNDED 1930
Colchester, IL 62326-0358
Toll free: 800/447-5777
309/776-3222 (Fax)
Website: www.yetterco.com
E-mail: info@yetterco.com

2900 HUB ASSEMBLY

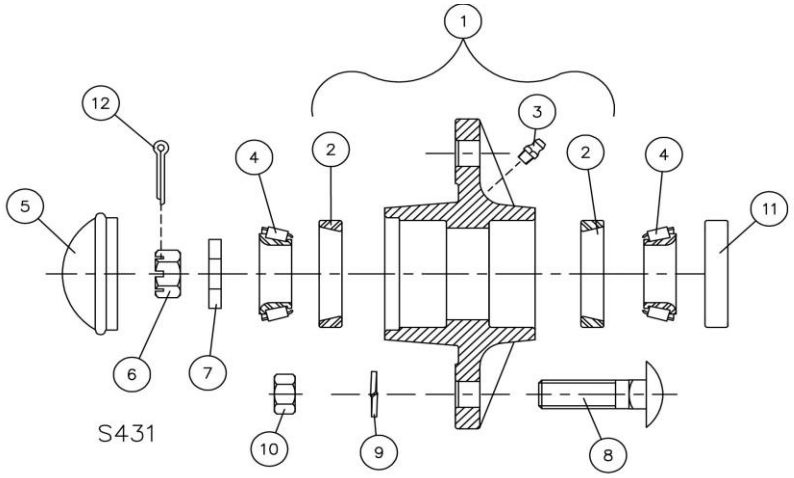

ITEM	PART NO.	DESCRIPTION	QTY
1	2900-105	HUB WITH CUPS	1
2	2550-029	CUP LM67010	2
3	2533-110	LUBE FITTING ¼-28	1
4	2550-027	CONE LM67048	2
5	2570-375	HUB CAP	1
6	2520-469	5/8-18 SLOTTED HEX NUT	1
7	2526-449	5/8 FLATWASHER ¼" THICK	1
8	2505-339	½-13 CARRIAGE BOLT GRADE 5	4
9	2525-352	½ LOCKWASHER	4
10	2520-352	½-13 HEX NUT	4
11	2550-066	TRIPLE LIP SEAL	1
12	2531-102	1/8 X 1-1/4 COTTER PIN	1
	2900-123	HUB KIT (INCLUDES 1-11)	